TO BE DISCONTINUED 12/2016. FOR REPLACEMENT, CLICK NTM-M, NTM-N or NTM-P.

NEW

LOOP POWERED LED BARGRAPH (and Powered)

FOR LOW COST HIGH RELIABILITY APPLICATIONS

> 20 SIGNAL CONDITIONERS

MODEL LPB

FEATURES:

- Over 20 Inputs (See text)
- 50 or 51 Unicolor Segments
- 1, 3, 5 Pointers or Full Bar
- Custom Color/Ranges/Scales
- Only 2 Wires To Connect
- Switchboard Case Also Mounts On 1/4 **DIN** Cut-Out
- Only 1" On Front Panel (Option 1)
- Only 1" Wide (Option 0)
- Lifetime Warranty

Switchboard Option 1

51 Segments

Edgewise Option 0

50 Segments

SPECIFICATIONS @ 25°C

- Accuracy & Linearity: 2% of F.S
- Burden: 4.5VDC (7V for "S")
- Min-Max. Input: 3.6 - 36mA
- External Power: 200mW (see text)
- Color: Red Standard
- Zero and Span Range: ± 30%
- Operating Temp: -20 + 70°C
- Storage Temp: -30 + 80°C
- Humidity: 5-95% RH, N.C.
- Front Panel: NEMA 3X Rated
- NEMA 4x On Request
- Warranty: Lifetime (LTD)

DESCRIPTION

Another "World's First" joins **OTEK's** long list of Powerless™(Patented) Loop Powered Instruments.

POWERLESS™: The **LPB-0** has 50 segments, the **LPB-1** has 51 bright high efficiency segments for 2% resolution and can be set for "Pointer" (1, 3 or 5) as well as full bargraph operation. The unit's low 4.5V burden in the loop allows for multiple units strung along the factory floor with only 2 wires and **NO** power supply to connect.

POWERED: The "Powered" version accepts 5, 7-32 VDC & 90-265 VAC isolated power and 5 VDC non-isolated. Here you can use any of our standard signal conditioners (see description and ordering information) or we will design it for you. The bargraph is unicolor red. For custom colors or segments, use #9 on 3rd digit and specify it.

SIGNAL CONDITIONERS: The **LPB** series offers over 20 signal conditioners to interface directly to your sensor/transducer (see ordering information and descriptive sections). The Powered version can supply power to your sensor/transmitter. The Powerless™ version extract the parasitic power (<100mW) from your signal (ac or dc) to power itself.

CUSTOMS: **OTEK** has developed over 40 signal conditions (our "SC" series) for any signal and most of them can be included on the **LPB**. They even include 4-20mA transmission so the **LPB** becomes a "transmitter bargraph." Contact **OTEK** for your special needs.

IF YOU DON'T SEE IT, ASK FOR IT!

520-748-7900
FAX: 520-790-2808
E-MAIL:sales@otekcorp.com
http://www.otekcorp.com

OTEK™ CORP.
SINCE 1974

4016 E. TENNESSEE ST.
TUCSON, AZ. 85714 U.S.A.
MADE IN USA

HOW IT WORKS:

Current Loop Powered: We use a Zener to clamp the voltage to 5V max. and monitor the Loop's current (we invented it in 1974). (Digit 2, Option 0).

VDC Signal Powered: We monitor the voltage with high impedance and clamp it to a safe level to power the **LPB**. (Digit 2, Option 2).

AC Signal Powered: For VAC & Hz we use a capacitor limiting rectifier to power the **LPB** and monitor the VAC with an RMS-DC converter. For Hz we use an F-V for accurate conversion. For A.A.C. (Pat. # 4,908,569) a C-V converter extracts the current from your C.T. for power and monitors the signal with RMS-DC. (Digit 2, Options Q-T).

Externally Powered: Non-Isolated 5VDC or isolated 5-36VDC or 90-265VAC 50/60Hz is optional (Digit 3, Options 1-8). Max Power: 200mW.

THE SIGNAL CONDITIONERS: (4th Digit) Option 0: 4-20mA Loop Powered:

The current flows through a Zener and "Shunt" resistor. The Zener clamps the voltage to about 3.5 Volts and the voltage across the Shunt is measured and displayed. If the "burden" (3.5 - 4.5V) is too high for your application, use the externally powered version (Option 2).

Accuracy: ±0.05% of F.S

Option 1: 4-30VDC Signal Powered:
Another **OTEK** innovation. The voltage signal powers an **LDO** to protect the **LPB** and a divider network is used to measure and display the signal. If the input resistance of this Option is too low (~ 500 Ohms), use option 3 or 4 and specify. Power Input (Digit 6) must be Option 0 (Powerless).
Accuracy: ±0.1% of F.S.

Option 2: 4-20mA Externally Powered: It only drops 0.1V @ 20mA (5 Ohms) but the "**LPB**" needs 5VDC @ 20mA to operate (including the backlight or LEDs). Power Input (Digit 6) must be Option 1-8 (Powerless).
Accuracy: ±0.05% of F.S.

Options 3-6: VDC & mADC Externally Powered:
Input impedance is 1 Mega Ohms on all VDC ranges and 1 Ohm on 200mADC range and 100 Ohms on 2mA range.

Accuracy: ±0.05% of F.S.

Options 7, 8 & A: V & mA RMs: Here we use a **True RMS-DC** Converter for accurate (± 0.05%) measurement of sine waves up to 10KHz (± 0.1% for 10-20KHz) and SCR;s fired to ± 1%. Input impedances vs. range are the same as for VDC & mADC ranges. **Warning: No Isolation!**

Accuracy: ±0.05% of F.S.

Option 9: Custom: Use this option to describe any custom input, scale or modification to the **LPB** and contact us for feasibility and cost.

Option B: 5Amps AC:
Specifically for current transformers (**C.T.**) this option requires an externally mounted (supplied) 0.05 Ohm, 0.1% 5 Watt resistor. You can mount the "Shunt" at your **C.T.** or next to the **LPB** but make sure the connections are "Perfect" to electrical codes. The C.T. might have **"Lethal" High Voltage** without a "Shunt" (Open) and the **LPB** will "Smoke."

See OTEK's New **CTT** models for **C.T.** powered instruments (Patented.)
Warning: No Isolation!
Accuracy: ±0.05% of F.S.

Option C: Strain-Gage (<1000 Ohm Type): Here we use a high accuracy and stability constant current (~1mA) source, and a differential amplifier to convert the 2 or 3mV/V (typical) sensitivity of your "Load-cell". ***Specify*** your Strain-Gage sensitivity and full scale and the **LPB's** display at Zero and Full Scale Please!

Accuracy: ±0.05% of F.S.

Option D: Strain-Gage (≥1K < 5K Ohm): These are typically "Monolithic" **S-G** that require constant voltage (preferably) excitation. We use 4.096V for high stability and accuracy. **Specify** your S-G impedance and sensitivity and the **LPB's** display at Zero and Full Scale.

Accuracy: ±0.1% of F.S.

Note on S-G: Some S-G offer +/- 1VDC or 4-20mA condition output. Use Option 9 and specify.

Option E: RTD (PT100): We excite your 2 , 3 or 4 wire RTD with 200µA to avoid the "self heating" effect. The range of the **LPB** is the same as your **RTD** typically -200^{0}C to +800^{0}C (-328 + 1562^{0}F). The **PT100** has a temperature coefficient of 0.00385 Ohms/Ohm/^{0}C. For legacy 0.00392 TC (known as ANSI 392) contact **OTEK** and use Option 9.)
Note: Standard Scale printing is 0-100%; see digit 5.
Accuracy: ±0.5% of F/C plus sensor's error.
Note: For 2 wire, jump - S to -E and +S to +E. For 3 wire only jump -S to -E.

Option F: RTD (PT1000): Same as PT100 except it is 1000 Ohms at 0^{0}C instead of 100 Ohms @ 0^{0}C. For copper **RTD** (10 Ohm), contact **OTEK**. Same connection as Option E apply.

Accuracy: ±0.5% of F/C plus sensor's error.
Note: For long distances use a 4-20mA transmitter such as our 900 or LPT series.

Options G&H: Frequency Input: We use an **F-V** to accept frequencies from 40 - 20KHz and amplitudes from 1-400V peak or dry contact or open collector transistor (O.C.T.). For 50 or 60Hz power line frequency measurement, use Option H or S.

Accuracy: ±0.05% of F.S.

Option J: Thermocouple (Type J): This **TC** has a range of -210 to + 760^{0}C (-350 + 1390^{0}F). Its color is white (+) and Red (-), cold junction (CJ) is inside the **LPB** at the connector base. Make sure the connections from the **LPB** and your **TC** are as close to the **LPB's** entrance as possible to avoid errors. If you short out the **LPB's** +**TC** & -**TC** together, the **LPB** will read the ambient temperature due to its built-in C.J.C. (Cold Junction Compensation).

For best Accuracy, specify range in 300° increments (i.e., 0-300F)
Accuracy: ± 2^0 F/C of signal input.

Option K: TC (Type K): This is yellow (+) and red (-) and has a range of -270 + 1370^{0}C (-440 + 2500^{0}F). The same notes as Option J apply.
Accuracy: ± 2^0 F/C of signal input

For Other TC use #9 and Specify.

Option L: %RH: This conditioner is designed to interface to a typical (capacitance type) 2-3pF/% of **RH** made by several manufacturers. Use Option 9 and contact **OTEK** to specify your sensor's specifications.

Accuracy: ± 2% RH of signal input.

Option M: pH (Acidity): We use a FET input (10^{15}) amplifier and calibrate the **LPB** for 0-14.00 pH using the Industry's standard ± 413 mV = ± 7pH coefficient. **Note:** Standard scale printing is 0-100%. See Digit 5.
Note: Not temperature compensated.
Accuracy: ±0.05% of F.S.

Option N: ORP (Oxygen Reduction Potential): Our FET amplifier (10^9) accepts the industry standard 2000mV F.S. of the probe and the **LPB** displays it in % (0-100.00%).

Accuracy: ±0.05% of F.S.

Option P: Hi Speed Peak & Hold (P&H): Now you can capture fast transients greater than 5 microseconds (even faster soon) with resolution greater than 0.1% of F.S. and retention of greater than 10 years (Due to OTEK's new and patent-pending **P&H Option**).

Input: 2VDC F.S. or mADC (Specify Range). Contact OTEK for V/mA RMS or Loop Powered.

Accuracy: +/- 0.1% of F.S. +/- 1 Digit

Linearity & Resolution: +/- 0.1% of F.S.

Response time: >200KHz (<50uS)

Retention: > 10 years (with power on)

Note: Options Q-T only available with Powerless™ Signal power input (Option 0).
(Pat. # 4,908,569)

Option Q: VAC Signal Powered: Warning! No Isolation! This option uses the AC Voltage Signal to power the **LPB**. Since the **LPB** uses about 30mA @ 5VDC, we use a coupling capacitor AC-DC converter to generate 5VDC. Consequently, your signal source should be capable of producing about 150mW without overloading it, otherwise use Options 7 or 8 (externally powered). Range: 50-150VAC; Method: RMS Calibrated; Accuracy & Linearity: ±0.5% of F.S. Best and safest when driven by a P.T. (Potential Transformer. ***Always turn power off before connecting!***

Option R: AAC Signal Powered: Warning! No Isolation! (Pat.# 7,626,378)
OTEK's Patented technique permits the extraction of power from a regular **C.T.** (Current Transformer) to power the **LPB** without distorting the signal. Since this option is designed to be powered from a C.T., it should not be connected directly to the mains without limiting the current and proper electrical grounding. **Lethal Voltage** might be present at the C.T. secondary (output) if the secondary is open.

Always turn power off before connecting! Range (at C.T. output): 0.1-5AAC; Overload: 50%/30 seconds; Peak: 100%/1 second; Conversion: True RMS; Accuracy & Linearity: ±0.05% of F.S.; Burden on C.T.: <150mW. Hz: 45-65.

Option S: Hertz (Line Frequency) Signal Powered: Warning! No Isolation! This option uses the same power technique as Option Q above and the same precautions and warnings apply. Here we use a "Zero Crossing" detector and a F-V converter to give you the **A.C.** line frequency display with 0.1 Hz resolution.

Range: VAC: 50-150VAC/Frequency: 50-440Hz; for 400 Hz line, use Option #9 & specify. Freq. 50-450 Hz.

Accuracy & Linearity: ±0.5% of F.S.

Note: Standard scale printing is 0-100%. See Digit 5

Option T: Signal Powered AC Watts: Warning! No Isolation! Here we combine the powerless VAC & AAC options to arrive at real power calculations through our **CPU** and **DAC**. The same warnings and precautions of Options Q & R apply. Range: VAC: 50-150; AAC: 0.1 - 5A; Frequency: 40-450Hz; Accuracy & Linearity: ±0.1% of F.S.; Conversion: True RMS. Hz: 45-65.

Contact **OTEK** for other functions.

Power/Input (Digit 6): Option 0: Powerless™: The **LPB** is powered from the signal that it measures. ONLY available for options 0, 1, and Q through T of input signal (Digit 4). WARNING: Any other I/Os are NOT isolated from signal. Options Q-T (Digits 2 & 3) could have lethal potentials!

Option 1: Non-Isolated 5 VDC Power:

All listed I/O options (except Powerless™) are available. Power requirements vary with options included. The **LPB** requires under 150 mW (30 mA@5VDC).

Options 2, 6 & 8: Isolated Power

These options offer minimum isolation of 500 VAC or DC and their efficiency is about 80%. All power input ranges are +/-5%.

Option 7: Non-Isolated 7-32 VDC:

We use a switching LDO with a regulated output which accepts 6-32VDC at high efficiency (90%).

Bargraph: The LPB can display 1, 3, 5 or "All" segments depending on the position of the JP1 & 2 jumpers on the rear. See typical connections.

Zero & Scan: Always adjust zero before span and repeat if required.

MECHANICAL INFORMATION PRELIMINARY

Edgewise (Option 0)

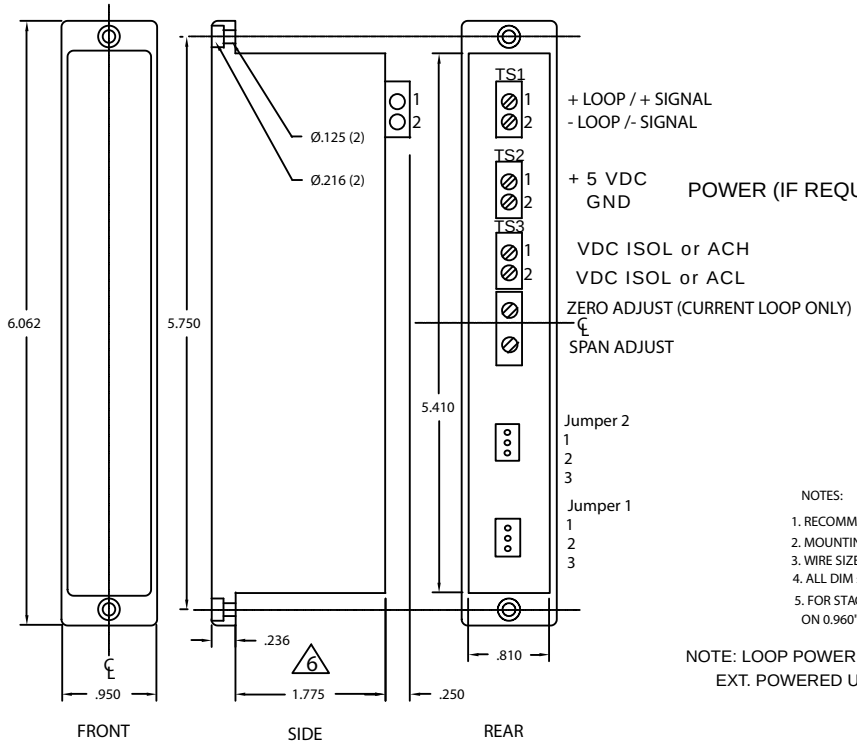

BARGRAPH MODE SELECT JUMPERS

Disply Jumper Settings

Mode	JP1	JP2
Full	2&3	2&3
1 bar	2&3	1&2
3 bar	1&2	2&3
5 bar	1&2	1&2

NOTES:

1. RECOMMENDED PANEL CUTOUT: 0.840 x 5.452
2. MOUNTING HOLES (2) FOR #4 CLEARANCE HARDWARE SUPPLIED
3. WIRE SIZE ACCEPTED > 24 < 16 GA.
4. ALL DIM ±0.010"
5. FOR STACKED APPLICATIONS MAKE MOUNTING HOLES ON 0.960" CENTERS.

NOTE: LOOP POWER UNITS HAVE ZERO ADJUST AND NO POWER CONNECTOR
EXT. POWERED UNITS HAVE POWER CONNECTOR & NO ZERO ADJUST POT.

LPB TYPICAL CONNECTIONS

NOTE: Verify power input (Digit 6) before connecting

UPDATED 12/14/11

FOR LPB-0 EDGEWISE

OPTION	INPUT	TS1- (SIGNAL INPUT)	TS2- (SIGNAL INPUT)	TS3- (POWER INPUT)	
0	4-20mA Loop Powered	1: + LOOP 2: - LOOP	NONE	NONE	
1	4-30VDC Signal Powered	1: +VDC SIG. 2. - VDC SIG.	NONE	NONE	
2	4-20mA External Powered	1: + LOOP 2.: - LOOP	1: +5V I/O 2: GND	OR	1: V+/ACH 2: V-/ACL
3-6	200mVDC/1M Ohms 500 VDC/1M Ohms 2mADC/100 Ohms 200mADC/1 Ohms	1: + SIG. 2: - SIG.	1: +5 V I/O 2: GND	OR	1: V+/ACH 2: V-/ACL
7,8 & A	200mVRMS/1M Ohms 500VRMS/1M Ohms 2mARMS/100 Ohms	1: SIG. HIGH 2: SIG. LOW	1: +5 V I/O 2: GND	OR	1: V+/ACH 2: V-/ACL
9	CUSTOM CONTACT OTEKCORP.COM 520-748-7900				
B	5ARMS/0.05 Ohms	1: 0.05 OHM H 2: CT L	1. +5 V I/0 2. GND	OR	1: V+/ACH 2: V-/ACL
C & D	Strain Gage<1000 Ohms Strain Gage>1000 Ohms	1: + SIG. 2. - SIG.	1: -E 2: +E	1:V+/ACH 2: V-/ACL	
E & F	2,3 or 4 Wire RTD PT100 (100 Ohms) 2, 3 or 4 Wire RTD PT1000 (1K Ohms)	1: + RTD 2. - RTD	1: -E 2: +E	1:V+/ACH 2: V-/ACL	
	Note: For 3 wire, Jump -E to -RTD; For 2 wire jump +E to +RTD also				
G & H	Frequency 40-20 KHz Frequency 50-440HZ Line	1: SIG. HIGH 2: SIG. LOW	1: +5V I/O 2: GND	1:V+/ACH 2: V-/ACL	
J & K	TC Type J TC Type K	1: + TC 2: - TC	1: CJC 2:	1:V+/ACH 2: V-/ACL	
	Note: CJC (in 4148) included.				
L, M & N	%RH (Specify Sensor) pH (0-14.00) ORP (0-2000 mV)	1: + SIG. 2: - SIG.	1: +5V I/O 2: GND	1:V+/ACH 2: V-/ACL	
P	High Speed Peak & Hold, 2 V F.S. RUN: TS1-2 to TS2-1; RESET: OPEN (OR 5 V)	1: SIG. HIGH 2: RESET	1: SIG. LO & GROUND 2: +5V I/O	1:V+/ACH 2: V-/ACL	
	Note: Ground reset for peak detect, open to reset.				
Q & S	VAC Signal Powered (P.T.) 50-440 Hertz Signal Powered (P.T.)	1: VAC HIGH 2: VAC LOW	NONE	NONE SEE TS1 & TS2	
R	AAC Signal Powered (5A C.T.)	NONE	1: CT HIGH 2: CT LOW	NONE SEE TS1 & TS2	
T	Watts AC Signal Powered (P.T. & C.T.)	1: VAC HIGH 2: VAC LOW	1: CT HIGH 2: CT LOW	NONE SEE TS1 & TS2	

NOTE: Max I out of 5V: ≤50mA when externally powered.

LPB TYPICAL CONNECTIONS

NOTE: Verify power input (Digit 6) before connecting

UPDATED 12/14/11

FOR LPB-1 SWITCHBOARD

OPTION	INPUT	TS1- (SIGNAL)	TS2- (POWER)
0	4-20mA Loop Powered	3: + LOOP 4: - LOOP (NOTE 3)	NONE
1	4-30VDC Signal Powered	3: +VDC SIG. 4. - VDC SIG. (NOTE 3)	NONE
2	4-20mA External Powered	5: - LOOP; 1: +5V I/O 6: + LOOP; 2: GND	1: V+/ ACH 2: V-/ACL
3-6	200mVDC/1M Ohms 500 VDC/1M Ohms 2mADC/100 Ohms 200mADC/1 Ohms	5: SIGNAL LO; 1: +5V I/O 6: SIGNAL HIGH; 2: GND	1: V+/ ACH 2: V-/ACL
7,8 & A	200mVRMS/1M Ohms 500VRMS/1M Ohms 2mARMS/100 Ohms	5: -SIGNAL; 1: +5V I/O 6: +SIGNAL; 2: GND	1: V+/ ACH 2: V-/ACL
9	CUSTOM CONTACT OTEKCORP.COM 520-748-7900		
B	5ARMS/0.05 Ohms	5: 0.05 OHM H CT L 6: 1: +5V I/O 2: GND	1: V+/ ACH 2: V-/ACL
C & D	Strain Gage<1000 Ohms Strain Gage>1000 Ohms	5: - SIG.; 3: -E; 1: +5V I/O 6. + SIG.; 4: +E; 2: GND	1: V+/ ACH 2: V-/ACL
E & F	2,3 or 4 Wire RTD PT100 (100 Ohms) 2, 3 or 4 Wire RTD PT1000 (1K Ohms)	5: - RTD; 3: -E; 1: +5V I/O 6. + RTD; 4: -E; 2: GND	1: V+/ ACH 2: V-/ACL
	Note: For 3 wire, Jump -E to -RTD; For 2 wire jump +E to +RTD also		
G & H	Frequency 40-20 KHz Frequency 50-440HZ Line	5: SIG. LOW 1: +5V I/O 6. SIG. HIGH 2: GND	1: V+/ ACH 2: V-/ACL
J & K	TC Type J TC Type K	5:-TC; 3: 6:+TC; 4: CJC 1: +5V I/O 2: GND	1: V+/ ACH 2: V-/ACL
	Note: CJC (in 4148) included.		
L, M & N	%RH (Specify Sensor) pH (0-14.00) ORP (0-2000 mV)	5: -SIGNAL 1: +5V I/O 6. +SIGNAL 2: GND	1: V+/ ACH 2: V-/ACL
P	High Speed Peak & Hold, 2 V F.S. RUN: TS1-5 to GND. Reset: OPEN	5: RESET 4: -SIG & GND. 6. SIG. HIGH 3: +5V I/0	1: V+/ ACH 2: V-/ACL
Q & S	VAC Signal Powered (P.T.) 50-440 Hertz Signal Powered (P.T.)	TSV-1: VAC H * TSV-2: VAC L (NOTE 2)	NONE
R	AAC Signal Powered (5A C.T.)	TSA-1: CT HIGH * TSA-2: CT LOW (NOTE 2)	NONE
T	Watts AC Signal Powered (P.T. & C.T.)	TSV-1: VAC H TSV-2: VAC L * TSA-1: CT HIGH (NOTE 2) TSA-2: CT LOW	NONE

NOTES:

1. Max I out of 5V: ≤50mA when externally powered.
2. * See Fig. LPB-1-1 on Page 8.
3. TS1-1, 2 & 5-10 are not populated.

LPB MECHANICAL

Switchboard (Option 1)

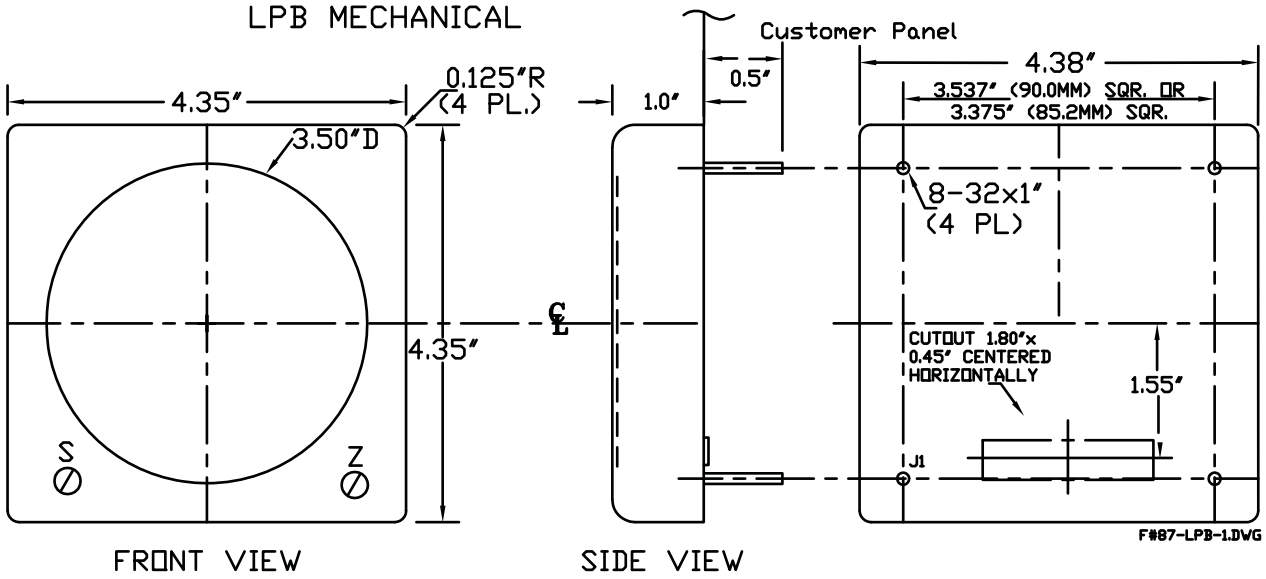

NOTE:
1. ANSI 4"(3.375") CASE CAN ALSO BE MOUNTED IN 1/4 DIN PANEL CUTOUT.
2.CONNECTORS AND 3.375" STUDS SPACING MEET ANSI39.1 STANDARD FOR SWITCHBOARD METERS. J1 FALLS WITHIN EXISTING "BARREL" CUTOUT.

LPB CONNECTION DIAGRAM (SWITCHBOARD OPTION 1)

UPDATED 12/14/11

FIG. LPB-5 **CONNECTIONS**
(FOR LPB-1 OPTIONS 2-P)

NOTES: 1.) DON'T CONNECT UN-NAMED TERMINALS
2.) CONFIRM P/N BEFORE CONNECTING
3.) ALWAYS ADJUST ZERO BEFORE SPAN
4.) DON'T REMOVE FACTORY JUMPERS
5.) TS2 ONLY FOR ISOLATED POWER IN
6.) TS1-3 THRU TS1-6 FOR SIGNAL INPUT

BARS JUMPERS:
FULL BAR: 1 & 2 AND 3 & 4
1 BAR: 1& 2
3 BARS: 3 & 4
5 BARS: NONE

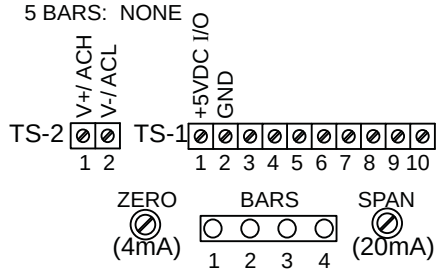

FIG. LPB-1-0 **CONNECTIONS (FOR LPB-1, OPTIONS 0 & 1 (POWERLESS™)**

TS-1 (1,2 & 5-10 NOT USED)

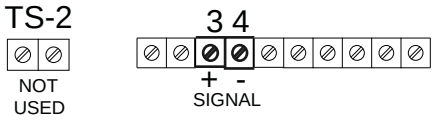

BARS, ZERO & SPAN PER FIG. LPB-5 (LEFT)

CONNECTIONS (FOR LPB-1, OPTIONS Q-T (POWERLESS™)

FIG. LPB-1-1 **TAC, LPB, SEB/LSB, ACS-X, AC POWERLESS**

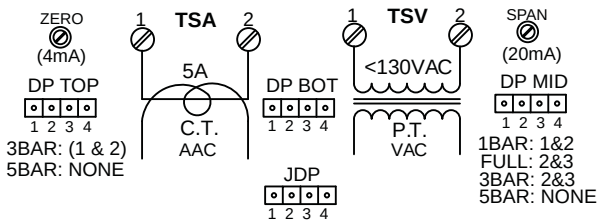

NOTES: 1.) USE P.T. FOR V, W OR HZ
2.) USE C.T. FOR A OR W
3.) USE C.T. & P.T. FOR WATTS

LPB ORDERING INFORMATION 4-19-13

MODEL
LPB

NOTE: Please READ BEFORE building part number:
1. If digit 4 is 0, 1, Q, R, S or T, then digit 6 must be 0, then (and conversely).
2. See notes at bottom of page.

MODEL: LPB - 1 2 3 4 5 6

CASE
0..... Edgewise
1.....Switchboard

GRADE (3)
I.....Industrial
S.....Intrinsically Safe
9.....Custom (Contact OTEK)

RANGE/CALIBRATION
0.....Standard
9.....Custom (Contact OTEK)

POWER INPUT (1)
0.....Signal/Loop Powered
1.....Non-Isolated 5VDC
2.....Isolated 5VDC
6..... Isolated 90-265VAC
7.....Non-Isolated 7-32VDC
8.....Isolated 7-32VDC
9.....Custom (Contact OTEK)

SCALE PLATE
0.....Standard (0-100%)
9.....Custom (Contact OTEK)

INPUT TYPE FULL SCALE (1,4,5,6)
0.....4-20mA Loop Powered
1.....4-30VDC Signal Powered
2.....4-20mA External Powered
3.....200mVDC/1M Ohms
4.....500 VDC/1M Ohms
5.....2mADC/100 Ohms
6.....200mADC/1 Ohms
7.....200mVRMS/1M Ohms
8.....500VRMS/1M Ohms
9.....Custom (Contact OTEK)
A.....2mARMS/100 Ohms
B.....5ARMS/0.05 Ohms
C.....Strain Gage<1000 Ohms
D.....Strain Gage>1000 Ohms
E.....2,3 or 4 Wire RTD PT100 (100 Ohms)
F.....2, 3 or 4 Wire RTD PT1000 (1K Ohms)
G.....Frequency 40-20 KHz
H.....Frequency 50-440HZ Line
J.....TC Type J
K.....TC Type K
L.....%RH (Specify Sensor)
M.....pH (0-14.00)
N.....ORP (0-2000 mV)
P.....High Speed Peak & Hold, 2 V
Q.....VAC Signal Powered (P.T.)
R.....AAC Signal Powered (5A C.T.)
S.....50-440 Hertz Signal Powered (P.T.)
T.....Watts AC Signal Powered (P.T. & C.T.)

NOTES (Continued):
3. Intrinsically Safe (I.S.) version is compliant by design only. No certificate available until further notice.
4. VDC Powered Signal Input Impedance: 4-20mA: 50 Ohms, 100mV: 10 Meg. All inputs are unipolar positive only. Contact Otek for other ranges.
5. See description. Use #9 and specify for range not listed.
6. Specify sensor manufacturer and type for pH & % RH.

***DOWNLOADS:* For manuals, user-software or drivers:**

www.otekcorp.com

Nuclear & Mil-Spec on Request

520-748-7900
FAX: 520-790-2808
E-MAIL:sales@otekcorp.com
http://www.otekcorp.com

OTEK™ CORP.
SINCE 1974

4016 E. TENNESSEE ST.
TUCSON, AZ. 85714 U.S.A.
MADE IN USA